International Journal of Latest Research in Humanities and Social Science (IJLRHSS)
Volume 05 - Issue 10, 2022
www.ijlrhss.com || PP. 126-134

A GSM Based Energy Meter Using Arduino via SMS

[1]Doris Chasokela, [2]Kumbulani Matshe, [3]Pilate Paringa
[123]National University of Science and Technology
[123]Faculty of Science and Technology Education
[123]Department of Technical and Engineering Education and Training

Abstract: Electromechanical energy meters, which make up the majority of the energy meters now in use in Zimbabwe, are rapidly being replaced by digital and electronic energy meters. The cash power energy meter that is plugged into a power supply socket allows the user of the Zimbabwean system that is now in use to assess the amount of electricity remaining. Therefore, the design/system proposes a GSM-based energy meter that utilizes an Arduino and a short messaging service (SMS). By sending an SMS, the system can replenish the electricity balance. The system cuts off the power supply if the electricity balance is low or zero. The technology can read the readings from the electricity meter and automatically updates the user's mobile phone.The software needed for the suggested based energy meter includes Proteus Design Suite for simulation, and it is programmed in an Aurdino IDE.

Keywords: Arduino, Global System for Mobile communication (GSM), pre-paid energy meter, Proteus Design software

Introduction

Prepaid Electricity Energy Meter is a good concept in which you can recharge its balance, like we do in our mobile phones. The design uses an automated system by using Arduino and GSM module. Electricity balance can be re charged through this system just by sending a short message service (SMS). It can also disconnect the home power supply connection, if there is low or zero balance in the system. This system reads the energy meter readings and automatically send some updates to user's mobile phone like low balance alert, cut off alert, resume alert and recharge alert.Prepaid Electricity Energy Meter is also known as smart electrical energy meter. Various technologies have been developed and used to measure the electrical consumptions. For the billing, the users get the bill from the energy board after they generated and provided using the several methods. At the moment, some of the residences in Zimbabwe use the traditional electro - mechanical watt meters and the readings are not automated. The users have to wait the bill of energy consumptions for every month to pay their energy bill. Normally, at the end of the month, a staff from the meter board billing visits every house to read the meter reading and at the same time, give the bill to the users, Balasubramanian (2016) and Peter and Iderus(2020).An electricity meter or energy meter is a device that measures the amount of electric energy consumed to residence or business. There are two types of Domestic Ordinary Power Consumers meters single phase and three phases, Rahul et al. (2022). The energy consumption is measured by all electrical services using kilowatt- hours meter with refer to kilowatt-hours (kWh).

Then electronic meters were introduced with similar function with the electro-mechanical, but it replaces from analog to digital system, Naidu and Naseer (2022), TB, et al, (2021) and Sultan (2019). With this system users can note down the voltage, power reading unit, current and the time, date of the energy consumption. This system just gives some advantages over the previous meter reading. After the electronic ones, the meter reading developed with the Bluetooth based technology which is the wireless communication and also known as Automatic Meter Reading (AMR). This system is wireless and the personal computer could be used to record the power consumption of energy meter. The reading meter will be saved to the database and bill will be generated. The latest technology used is a Global System for Mobile Communication (GSM) used for communication and reloads purpose, Peter &Iderus (2020). This system replaces the Bluetooth technology and the data sent using Short Message Service (SMS) to the customer and the energy board.

Smart meters equipped with prepayment facility have become a rapidly growing technology because it allows the utilities to manage their cash flow more efficiently, Dahunsi et al, (2021) and Pinnarelli et al, (2021).Majority of the energy meters currently used in Zimbabwe are electromechanical energy meters which are gradually being replaced by digital and electronic energy meters. The Zimbabwe Electricity Transmission and Distribution Company (ZETDC) is currently focusing on introducing smart meters for domestic consumers as a method of implementing demand side management,Sibanda and Gwamuri (2021) and Otuoze, et al, (2017). Few issues related to existing energy metering structure include a large number of inspectors to be employed for meter reading and bill payment related tasks, incorrect meter readings, billing errors and errors due to estimated bills, reluctance of consumers for paying electricity bills on time, uncontrollable demand growth and electricity theft. In addition, consumers have to spend time and energy standing in queues to make bill payments. When

the pre-paid model was introduced by the ZETDC, the consumers were promised that the prepaid model would also help to reduce the problem of power cuts. However, this was going to be achieved was not clear as the power cuts went on unabated. It therefore means the customers had been expecting to see the problem of power cuts reduced and convenience enhanced by the introduction of pre-paid metering system in their homes.

1.2 Problem Statement

In Zimbabwe, electromechanical energy meters were used for a long time. These meters work by checking and figuring the quantity of turns of an electrically directing metal plate which is made to rotate at a speed in respect to the power experiencing the meter. Those electromechanical energy meters are being supplanted by the newly digitized meters due to different problems like there is no way to upgrade those energy meters, its accuracy was limited and those meters were easy to manipulate because direction of revolving disc can be easily reversed. Nowadays, digital energy meters can measure voltage, current and power also but electromechanical energy meters can only measure active power. Digital meters measure energy usage by highly integrated circuits, by capitalizing the voltage and current that gives the instantaneous power in watts. Digital meters show usage of electricity in digits on a liquid crystal display and those meters are highly accurate, inexpensive, theft reluctant, etc.

Literature Review

Technological advancements have resulted in Power Sector Reforms in Africa and the world over, Mohsin, et al. (2021) and Yuguda, et al. (2022). One option has been to switch from the traditional post-paid models of billing to the modern pre-paid model to improve efficiency. Other efforts have been targeted towards the adoption of various subsidy schemes, either directly or through tariff structures. Prepayment metering is the trade measurement of electricity which is required to be purchased by the customer in advance of the consumption of the electricity.

Pre-paid meters are relatively new in the world, many countries, developing and developed, have now adopted the system, Emetere, et al. (2021) and Hesselmanet al. (2021). The United States of America (USA), China, Argentina, Brazil, India, Turkey, Northern Ireland, New Zealand, Australia, Ghana, Kenya, Rwanda, and Mozambique are some of the developed countries in which pre-paid electricity was adopted a long time ago, with the first prepayment program coming into place in the early 1990s, Kambule, et al. (2018). Arizona's Salt River Project (SRP) operates M-Power, the largest prepayment program in U.S.A. Since 1993 and by 2010, it had grown with about 12% of the residents, Qiu, et al. (2017) and Liang (2021).One factor which has resulted in customer satisfaction with SRP's M-Power prepayment system is that the customers are provided with real-time consumption information about their homes. The customers also cite ability to plan their consumption as the main advantage of the program. Generally, the use of pre-paid electricity in America is increasing.

There is a potential increase in the uptake of prepayment metering in the Great Britain because the prepay tariffs are competitively priced and more convenient to top up, Fleck, et al. (2021).A customer focus study conducted in 2012 found that 81% of the users of pre-paid meters were either very satisfied or quite satisfied with it. They liked the control offered by the prepayment system and the fact that the system helps them to budget and reduces their worry about receiving bills that could push them into debt. India has also adopted pre-paid electricity. The system is welcome by most of the Indians who have adopted it. The study generally concluded that the pre-paid meter system proves to be a boom in the Power Sector.

Through the use of advanced metering technologies, African countries including Botswana, Ghana, Kenya, Mozambique Nigeria, South Africa Zambia and Zimbabwe amongst states on the continent began engaging in pilot projects and installation of prepaid meters, Mazzoni (2019) and Njakatiana (2020). Nevertheless, the limited financial resources have been channeled towards the full rollout of prepaid electricity meters. Although the use of pre-paid electricity is relatively new to most African countries, many of the countries have now adopted the technology. South Africa was the first country to adopt the use of pre-paid electricity in the 1980s. In Zimbabwe, pre-paid metering was introduced in 2011 and there was anxiety by consumers.

Experimental Set Up of a GSM Based Energy Meter Using Arduino via Sms

Research methods show a systematic theoretical analysis of different methods utilized in the project and also the principles associating with the project. This study takes a look at the hardware and software requirements, analysis and designs required to come up with the final project model. All this is done in order to produce a system which is relevant in solving the problem identified.

System Design

Research design is the plan on how the researcher goes about designing the project and solving the problem. This study employed the experimental research design which involves the development of a GSM based energy meter using arduino via sms.Application of GSM and Interfacing it with Prepaid Energy Meter,manages loads through mobile phone, by checking the load status and billing and energy losses are reduced, Rashid et al. (2022). In addition the project was configured using hardware and software components. The hardware components of the system model consist of Arduino uno, GSM module, enegy meter, 16*2 LCD, Bulb (Load) and a relay. The Proteus software development tool has been used in this project. Proteus is a complete development platform from product concept to design completion. Its advantages are intelligent principle layout, hybrid circuit simulation and accurate analysis, single-chip software debugging, single-chip and peripheral circuit co-simulation, PCB automatic layout and wiring.The Software requirements include Proteus Design Suite for simulation and Arduino IDE for programming.

System Block Diagram

The block diagram shows the main components that make up the system and how they are interconnected.

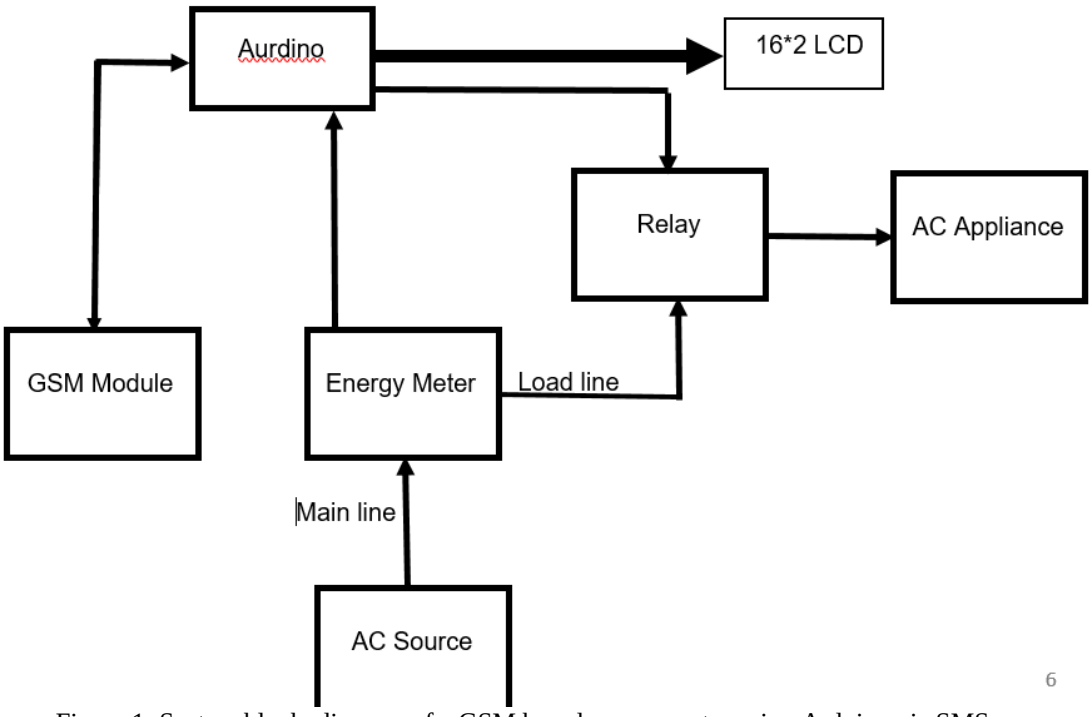

Figure 1: System block diagram of a GSM based energy meter using Arduino via SMS

Circuit Diagram

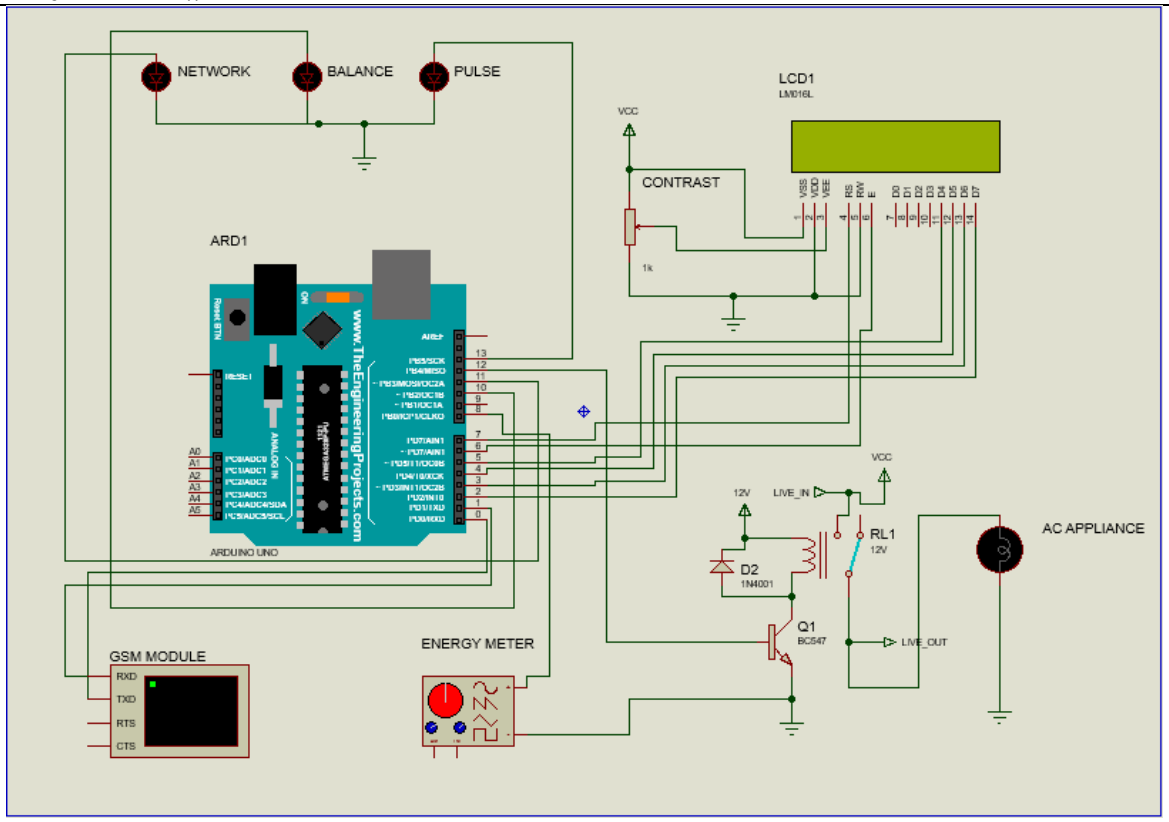

Figure 2: System circuit diagramof a GSM based energy meter using Arduino via SMS

Working of a GSM based energy meter using Arduino Uno via SMS

The working of this interfacing of prepaid energy meter with GSM modem system would be explained by connecting the lamp as a load at the output side of the energy meter. First, when we switch on this system, the system would be asking for modem initialization by displaying **Findingmodule**. For modem initialization we would have to enter **OK** twice on the virtual terminal of GSM and the LCD displays **module connected** then enter **+CPIN: READY** and the LCD displays **Network Found** and the green LED turn on indicating availability of network. The LCD displays **SUBMETER READY**, the pulse LED starting flicking at a rate that is determined by the usage of energy. The LCD displays the units in Kwh and the balance in dollars. Each time energy is used it subtracts the units as well as the balance. This system also sends the reminder or warning message to the user's mobile phone before the balance expired. In this case on the program we have set that if it is less than US$3 then a message should be send. Another message is sent stating that the user should recharge the energy meter soon. Failure to charge the relay switches off the bulb indicating that energy is cut off. To recharge, the user dial **amount #** and the LCD displays the current amount balance and units.

Hardware Connections

Arduino is an open source platform used for building electronics projects. Arduino consists of both a physical programmable circuit board (often referred to as a microcontroller) and a piece of software, or IDE (Integrated Development Environment) that runs on your computer, used to write and upload computer code to the physical board. The Arduino platform has become quite popular with people just starting with electronics, and for good reason. Arduino board is used to program and code the action of our system's devices. It consists of a programmed circuit board and can be considered a microcontroller. The main advantage of using that board includes executing the program automatically, low cost and consuming less than 12V. Finally, Arduino provides a standard form factor that breaks out the functions of the micro-controller into a more accessible package.

GSM is a standard developed by the European Telecommunications Standards Institute (ETSI). It was created to describe the protocols for second-generation (2G) digital cellular networks used by mobile phones and is now the default global standard for mobile communications. A GSM module is a wireless base modem device which can be either a mobile phone or a modem device which can be used to create a computer or any

other processor to communicate over a network. A GSM module needs a SIM card to be operated and operates over a network range subscribed by the network operator.

A GSM modem is a specialized type of modem which accepts a SIM card, and operates over a subscription to a mobile operator, just like a mobile phone. From the mobile operator perspective, a GSM modem looks just like a mobile phone. When a GSM modem is connected to a computer, this allows the computer to use the GSM modem to communicate over the mobile network. While these GSM modems are most frequently used to provide mobile internet connectivity, many of them can also be used for sending and receiving SMS and MMS messages.

At present the GSM module is used for remote control activities such as gate control or even temperature control. GSM module consists of GSM modem. A GSM module or a GPRS module is a chip or circuit that will be used to establish communication between a mobile device or a computing machine and a GSM or GPRS system. The modem is the critical part of the component. The module consists of a module powered by a power supply circuit and communication interfaces for a computer. A GSM modem can be a dedicated modem device with a serial, USB or Bluetooth connection, or it can be a mobile phone that provides GSM modem capabilities. The GSM module was connected to interface with Arduino; GSM modem TX pin to Arduino's Rx pin (D0) and GSM modem RX pin to Arduino's Tx pin (D1).

A relay consists of coil and it acts as a electromechanical switch. The magnetic field is induced in the circuit and causes the switch to close or open the electrical connection when small current flows through the circuit. The relay can control the high voltage circuit using small DC voltage circuit without any direct electrical connection (i.e.) the high and the low voltage circuit are magnetically separated and electrically separated.

Simulation – Modelling Results

Case 1: Finding Network

If you run the simulation the LCD displays the name of the project GSM Based Energy Meter followed by the address of the user. After few seconds the LCD displays Finding Module. The user should enter OK twice on the virtual terminal that pops on the screen representing a phone. The LCD displays find network then the user will enter +CPIN: READY and the LCD displays Network Found and the green LED turns ON indicating that the GSM is connected.

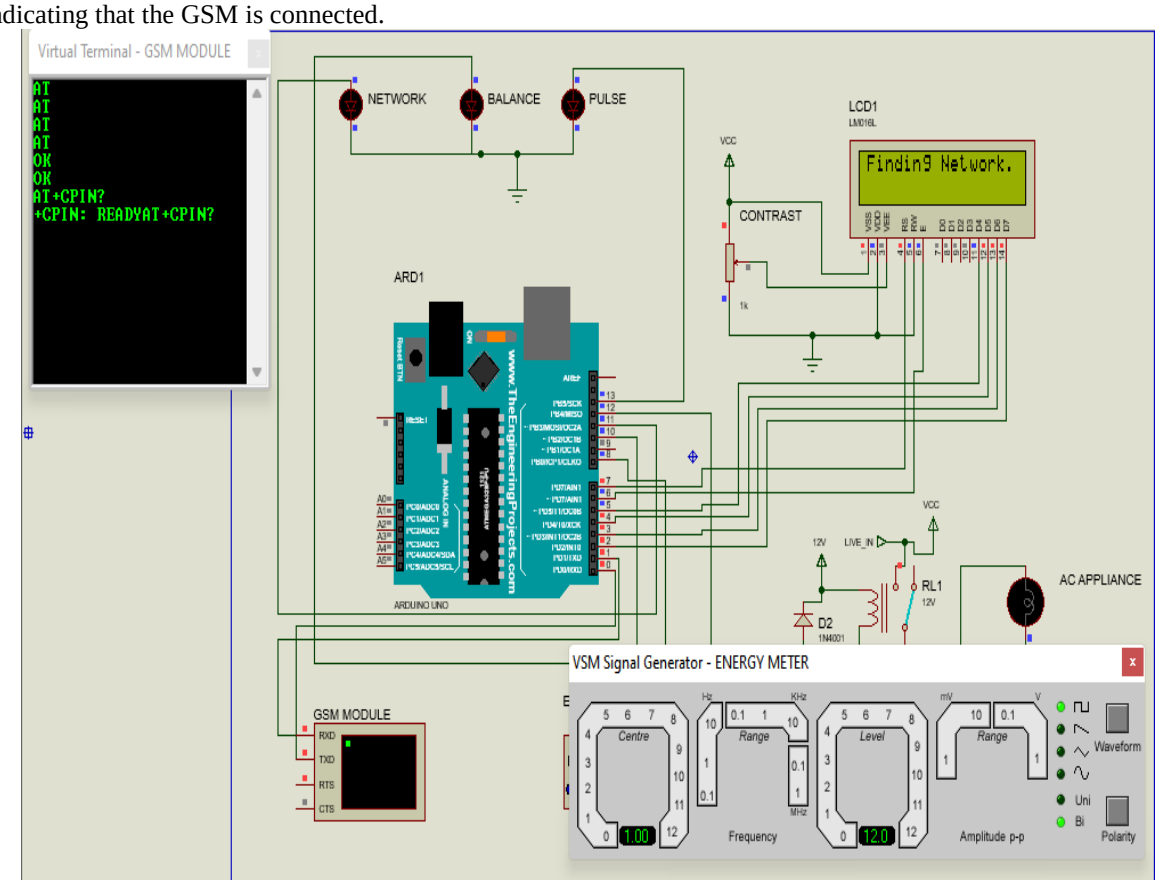

Case 2: Pulses

The LCD displays sub - meter Ready and after few seconds it displays the units in Kwh and the balance in dollars. The other green LED turns ON indicating the pulse at a rate of which electricity is used. At the same time the bulb will be ON. All the red dots on the circuit indicate a high voltage signal. The blue dots resemble a low voltage.

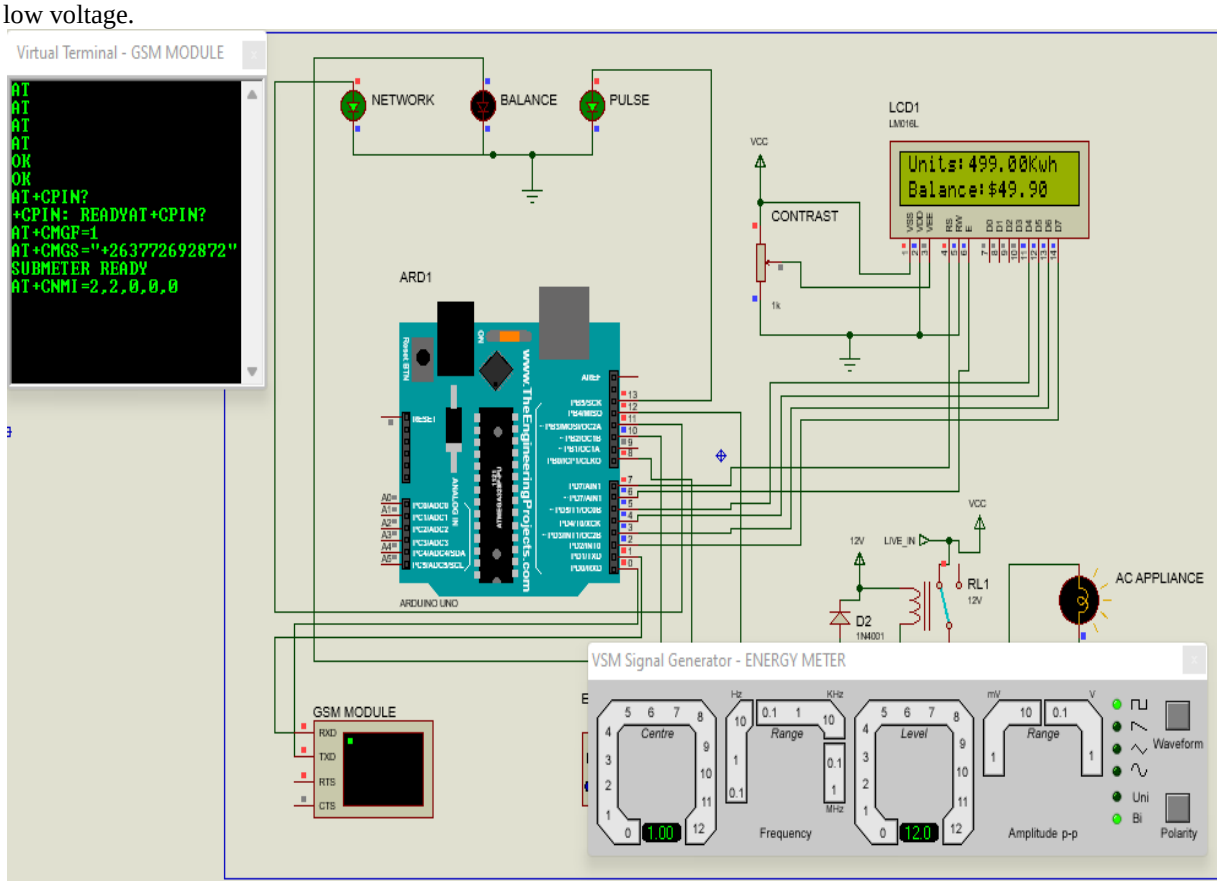

Case 3: Low Balance

The energy meter balance alert is sent to the mobile phone when the balance is $3 or less. An SMS written **'please recharge your energy meter soon'** is sent to the phone reminding the consumer to recharge the meter even if he is not at home. During this time of low balance, the red LED turns ON indicating low energy. In the case that the user did not recharge, the relay turns off due to low balance. Another message is sent when the energy is totally zero which says **recharge meter 1**.

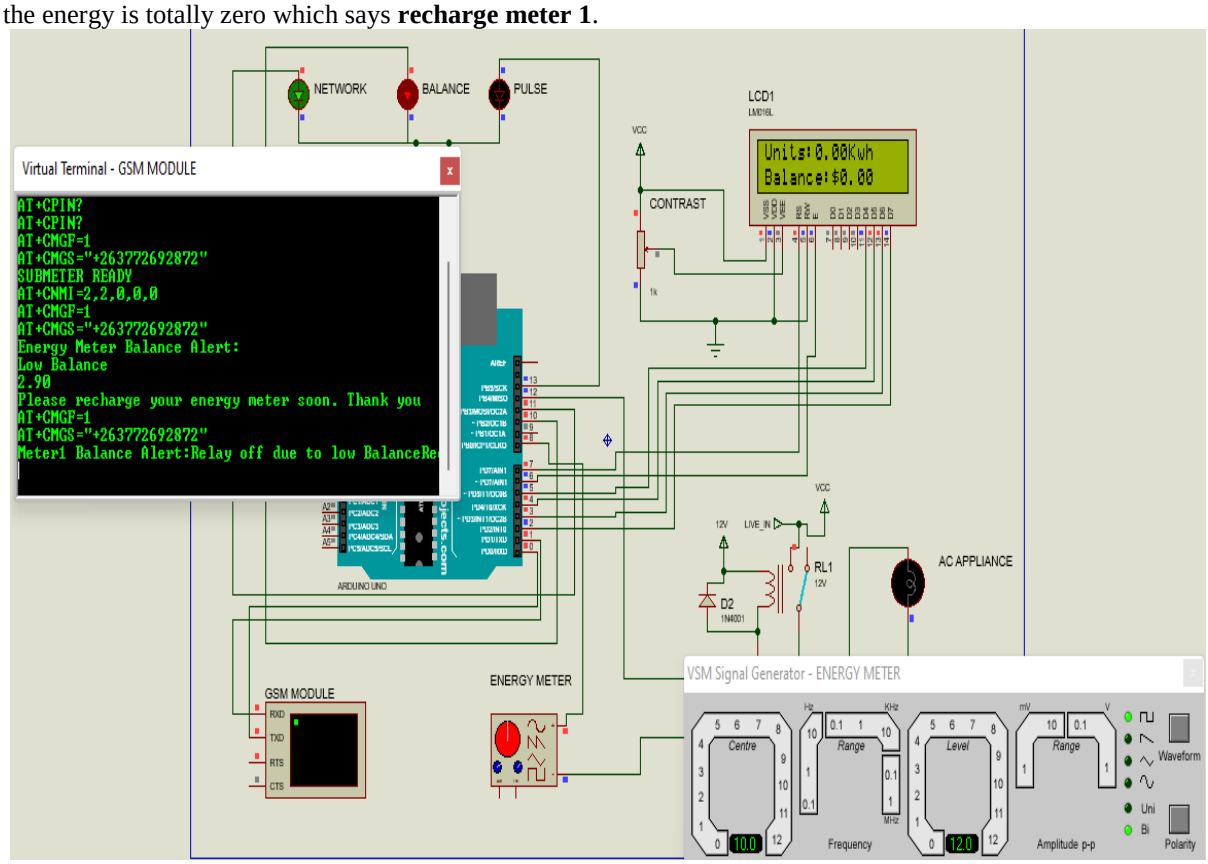

Case 4: Recharging the energy meter

Recharging the meter is achieved by dialing ***amount #**, the LCD displays the current amount balance and units. In the case of recharging the meter whilst the energy is not yet used up, the LCD displays the total amount and units altogether ie (the current balance and units plus the added amount and units). The whole system is brought back and the bulb turns on again indicating there is electricity.

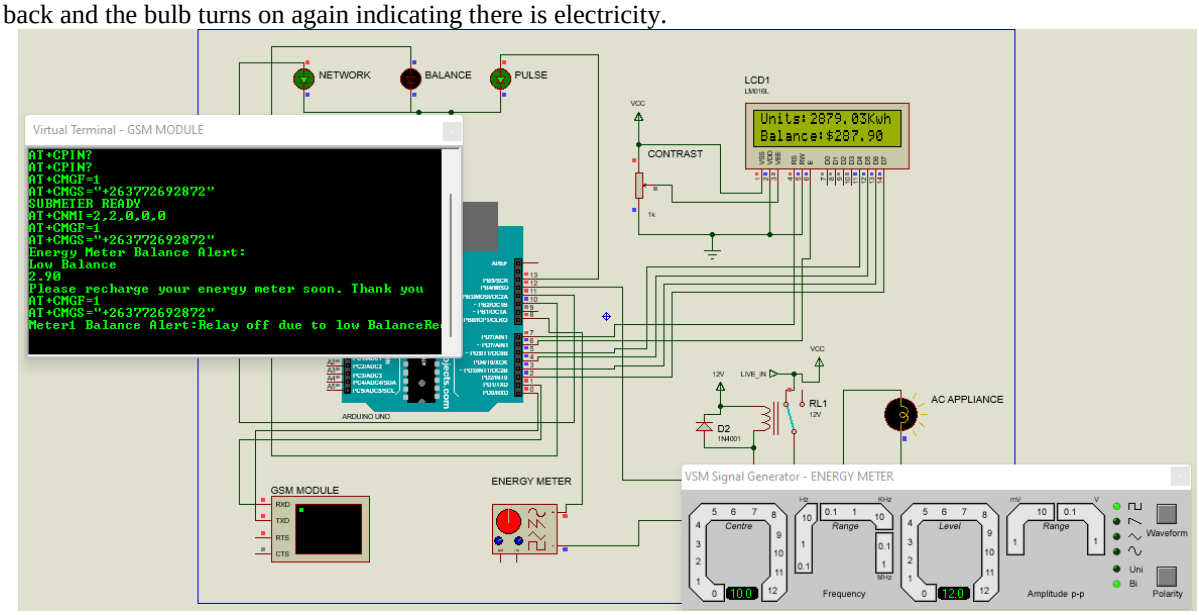

Conclusion

The development of the GSM based energy meter system has been successfully completed and the assessment of the success has to be made. This design evaluates the system against the set objectives in this study and summarizes all the shortcomings which were faced during the entire system development. The design helps in prepaid energy meter automated system by using Arduino and GSM module and has been designed and successfully tested. Integrating of all the hardware components used has been developed. Presence of every module has been reasoned out and placed carefully. This contributes to the best working of the unit. It is also effective in reducing costs related to existing energy metering structure which include a large number of inspectors to be employed for meter reading and bill payment related tasks. In addition, incorrect meter readings, billing errors and errors due to estimated bills are also reduced. The system also reminds reluctance consumers to pay electricity bills on time. It save time whereby consumers have to spend time and energy standing in queues to make bill payments.

Recommendations

Further innovations should be done to reduce the energy wasted and save a lot of energy for future use. It is strongly recommended that for the future, measurement parameters like power line current and power line voltage should be introduced as a way to optimize power network management. Furthermore, the system should be linked to the banking system, the system must not be limited by boundaries, designers must work on linking the system internationally and network improvement to enhance smooth communications.

References

[1]. Balasubramanian, G. (2016) Prepaid Smart Meter Energy Management System using Arduino Microcontroller with Labview, IEEE Electr. Insul. Conf. 4 (04) (2016) 408–412.

[2]. Dahunsi, F.M., Olakunle, O.R. and Melodi, A.O. (2021) Evolution of Electricity Metering Technologies in Nigeria. *Nigerian Journal of Technological Development*, *18*(2), pp.152-165.

[3]. Emetere, M.E., Agubo, O. and Chikwendu, L. (2021) Erratic electric power challenges in Africa and the way forward via the adoption of human biogas resources. *Energy Exploration & Exploitation*, *39*(4), pp.1349-1377.

[4]. Hesselman, M., Varo, A., Guyet, R. and Thomson, H. (2021) Energy poverty in the COVID-19 era: Mapping global responses in light of momentum for the right to energy. *Energy Research & Social Science*, *81*, p.102246.

[5]. Liang, J. (2021) *Energy Efficiency Improvement in Buildings: Essays on the Impacts, Adoption, and Benefits* (Doctoral dissertation, University of Maryland, College Park).

[6]. Mazzoni, D. (2019) Digitalization for energy access in sub-Saharan Africa: challenges, opportunities and potential business models.

[7]. Mohsin, M., Hanif, I., Taghizadeh-Hesary, F., Abbas, Q. and Iqbal, W. (2021). Nexus between energy efficiency and electricity reforms: a DEA-based way forward for clean power development. *Energy Policy*, *149*, p.112052.

[8]. Naidu, R.P.K. and Naseer, S. (2022) A Review on Smart Energy Meter Based on IOT. Journal of Algebraic Statistics, *13*(3), pp.1066-1073.

[9]. NjakatianaAndriarisoa, M. (2020) *Policy Framework for the Promotion of Digital Technology in Mini-grid Sector in Sub-Saharan Africa. The case of Blockchain Technology* (Master's thesis, PAUWES).

[10]. Otuoze, A.O., Usman, A.M., Mohammed, O.O. and Jimoh, A.A. (2017) A review of smart grids deployment issues in developing countries. *Arid Zone Journal of Engineering, Technology and Environment*, *13*(6), p.858.

[11]. Peter, G. and Iderus, S.B. (2020)Design of enhanced energy meter using GSM prepaid system and protective relays. Materials Today: Proceedings September 2020 DOI: 10.1016/j.matpr.2020.08.471

[12]. Pinnarelli, A., Menniti, D., Sorrentino, N., Mendicino, L. and Mendicino, S. (2021) Smart management of the production–demand binomial and the active participation of end-user through the smart metering support. *Designs*, *5*(1), p.22.

[13]. Qiu, Y., Xing, B. and Wang, Y.D. (2017) Prepaid electricity plan and electricity consumption behavior. *Contemporary Economic Policy*, *35*(1), pp.125-142.

[14]. Rahul, J., Sharma, S., Saxena, M., Chapola, R. and Yadav, R.K. (2022) GSM Based Smart Energy Meter Using Arduino Uno. International Research Journal of Modernization in Engineering Technology and Science. Volume: 04/ Issue: 06/June-2022

[15]. Rashid, F., Rasheed, S., Farooq, A., Ali, M., Ruben, Y., Jehanzeb, M. and Wahab, A. (2022)Design and implementation of prepaid power billing system in smart grid environment. International Journal of

Electrical and Computer Engineering (IJECE) Vol. 12, No. 4, August 2022, pp. 3365~3374 ISSN: 2088-8708, DOI: 10.11591/ijece.v12i4.pp3365-3374

[16]. Sibanda, J.M. and Gwamuri, J. (2021) Short Term Load Forecasting System Using Artificial Neural Networks For Improved Demand Scheduling By Power Utilities.

[17]. Sultan, Z., Jiang, Y., Malik, A. and Ahmed, S.F. (2019) GSM based smart wireless controlled digital energy meter. In *2019 IEEE 6th International Conference on Engineering Technologies and Applied Sciences (ICETAS)* (pp. 1-6). IEEE.

[18]. Nisarga,TB, D., Prajwal,A.M., Vinay, A.S. and Kiran, M.R. (2021) Smart Energy Meter for Smart Village. *Journal homepage: www. ijrpr. com ISSN, 2582*, p.7421.

[19]. Yuguda, T.K., Imanche, S.A., Ze, T., Akintunde, T.Y. and Luka, B.S. (2022). Hydropower development, policy and partnership in the 21st century: A China-Nigeria outlook. *Energy & Environment*, p.0958305X221079423.

To whom correspondence is made:
Doris Chasokela (Senior Lecturer)
National University of Science and Technology
Faculty of Science and Technology Education
Department of Technical and Engineering Education and Training